CLAY & BAILEY
MANUFACTURING COMPANY

2193 VALVE BOX

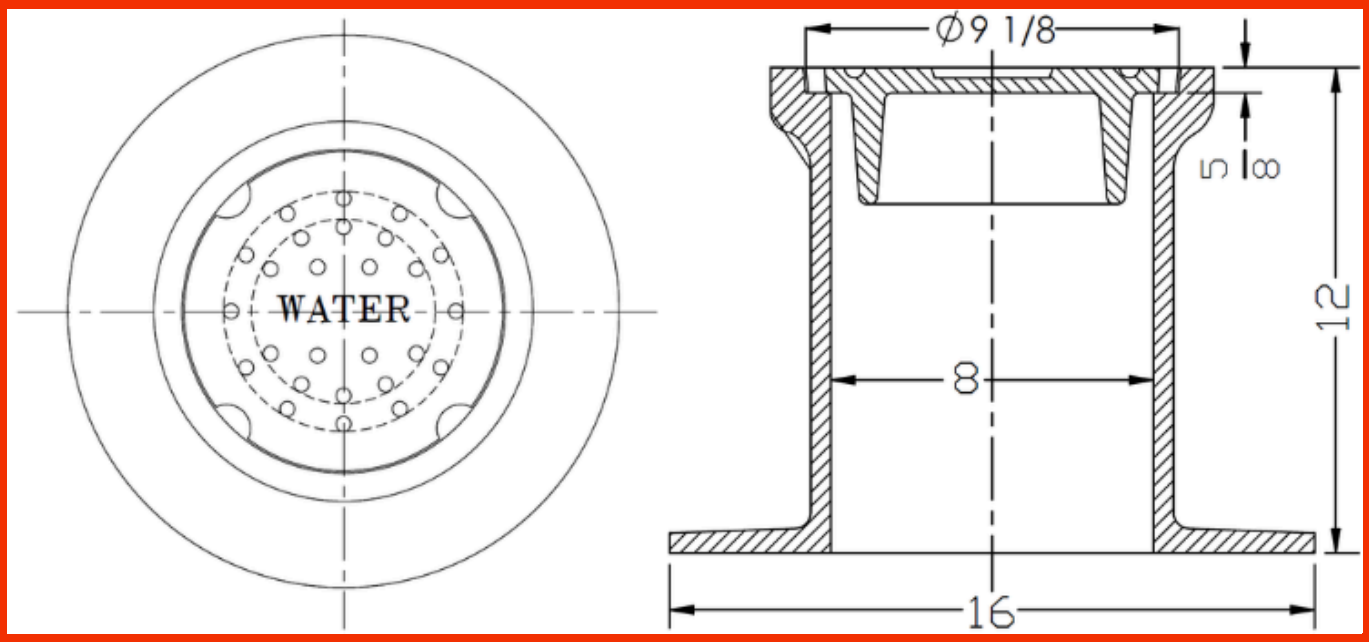

Features:
The 2193 Valve box is for use on a water or gas shut off valve in the street. It is designed to carry heavy traffic. It is for use with 6” Ductile Pipe and 6” PVC of any type.
Not for use for 6" Pipe with a cleanout assembly.

Lid markings available include:
Water, Survey, Gas, Sewer, Drain, and KCMO Water w/ Logo.

They can also be etched with other markings at an additional fee.

These are available in both Foreign and Domestic.

The domestic AM HWY 3020 series risers are used with this valve box in sizes ranging from .75” – 2.75”. The foreign 3020 series risers are used with this valve box in 1.5" & 2".

Revision Date: 3/9/26

Part Number Variations:
02193-01-1001 Domestic Lid M/ Water
02193-01-1003 Domestic Lid M/ Survey
02193-01-1021 Domestic Lid M/ Gas
02193-01-1051 Domestic Lid M/ Sewer
02193-01-1052 Domestic Plain LId
02193-01-1071 Domestic Lid M/ Drain
02193-01-2050 Domestic Ring*

***THE 02193-01-2050 DOMESTIC RING IS A SPECIAL ORDER ITEM. NO RETURNS, CANCELLATIONS, OR EXCHANGES.**

02193-01-6001 Foreign Lid M/ Water
02193-01-6002 Foreign Lid M/ Sewer
02193-01-6052 Foreign Ring
02193-01-6061 Foreign Lid W/ KCMO Logo

Weights

Lid	**23 Lbs.**
Ring	**93 Lbs.**

Material Spec:
ASTM A48, CLASS 35B, GRAY IRON